Low lift, drum from behind, pulley installation

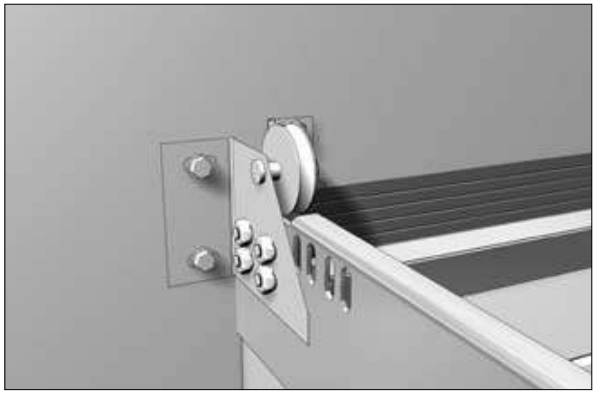

Place the pulley along the holes in the corner bracket and fix it with 4 bolts with semi-rounded head M8X16.

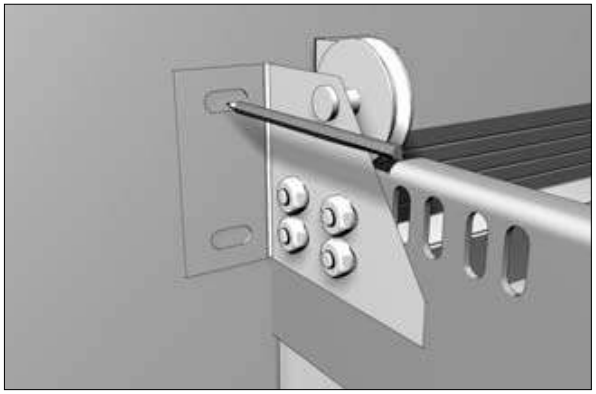

Mark and drill a ∅8 mm hole in the lintel wall.

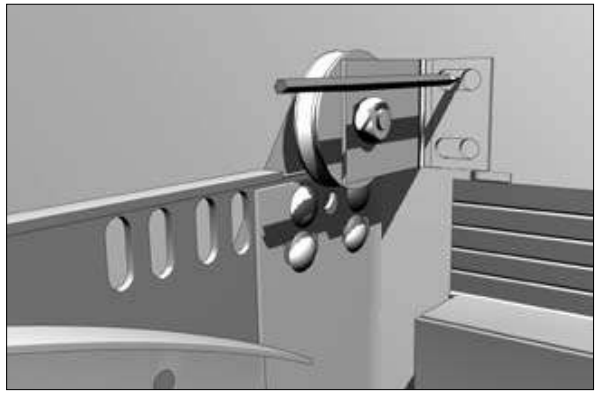

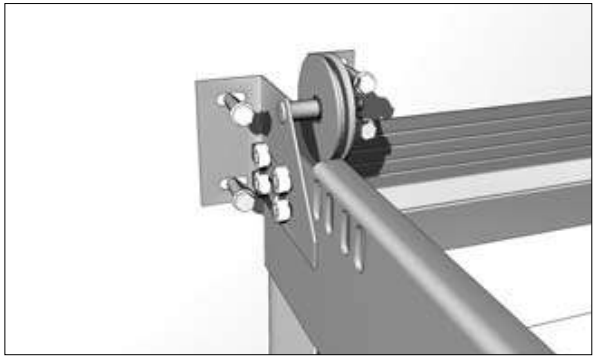

Insert dowels and fasten the end bracket to the wall using tapping screws and washers.

Low lift, drum from behind, mounting of torsion gear with octagonal shaft

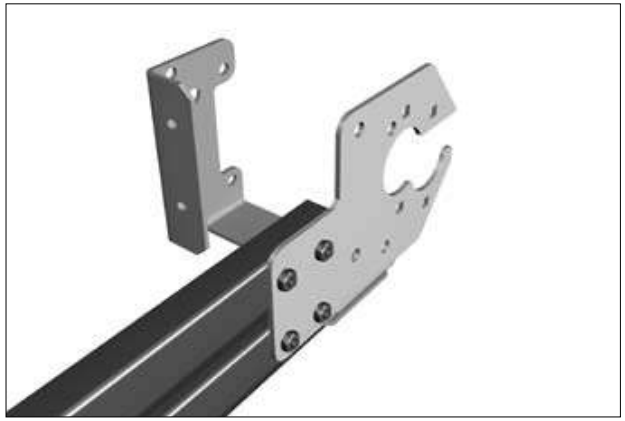

Place on both horizontal tracks the connected construction of the end support bracket for drum behind and safety device fastening bracket for drum behind fastening. Fasten the assembled bracket to the double horizontal tracks using bolts 8X16 with semi-round head and tighten them with nuts.

Fix the multi-purpose brackets on the end support bracket for drum from behind and on the safety device fastening bracket for drum from behind using bolts and nuts.

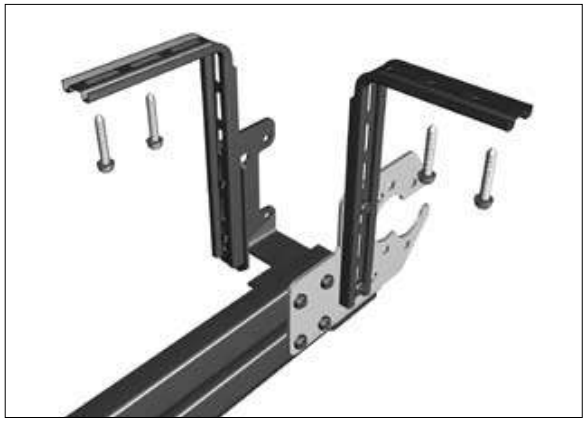

Fasten the multi-purpose bracket to the ceiling using 2 tapping screws.

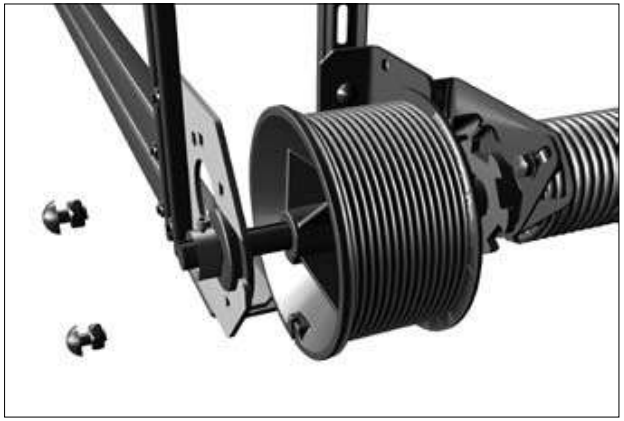

Position the torsion gear in assembly on the U-shaped brackets. using 2 bolts with semi-rounded head (M8X16) fasten the end plate with the bearing to the end support U-shaped bracket. Fasten the spring failure safety device to the end support U-shaped bracket using two sets of fasts (bolt 10X25, nut M10, spring washer 10).

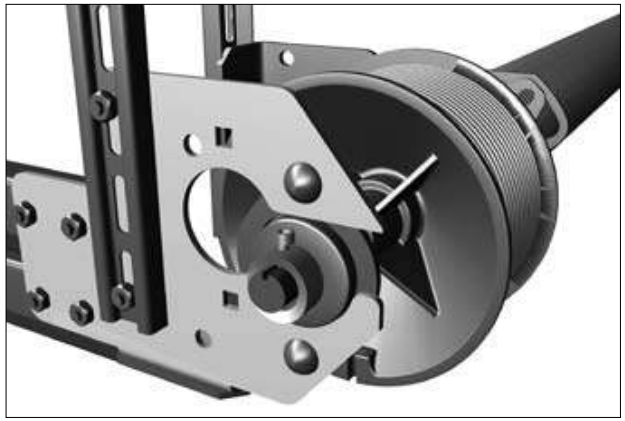

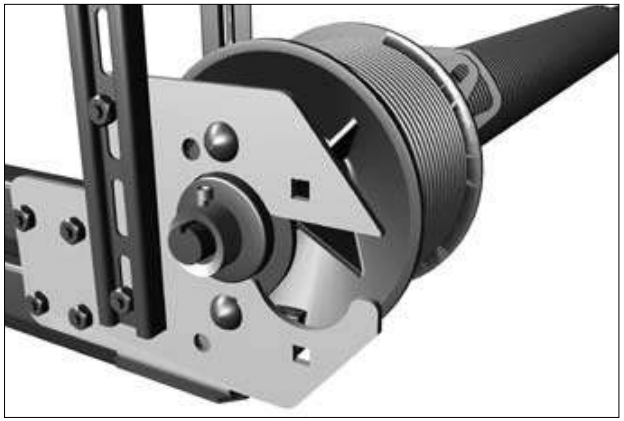

Fasten the end plate with bearing to the end support bracket for drum from behind using 2 bolts with semi-rounded head (M8X16), fix the bolts on the close to the lintel or far from the lintel slots (relatively the embrasure) depending on the installed drums.

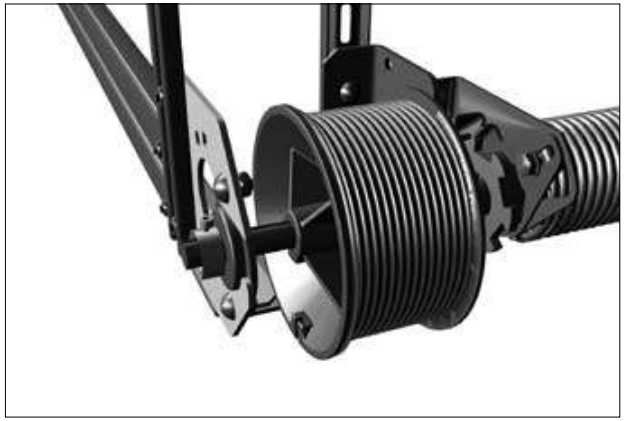

Fasten the spring failure safety device to the end support U-shaped bracket using 2 set of fasts (bolt 10X25, nut M10, spring washer 10).

Relation between end plate with bearing installation and installed end support U-shaped brackets (8) and drum type is represented in the table.

End support bracket for drum behind	CLOSE	OMI8	OMI12
	FAR	OMI18 L	

Low lift, drum from behind, mounting of torsion gear with cylindrical shaft

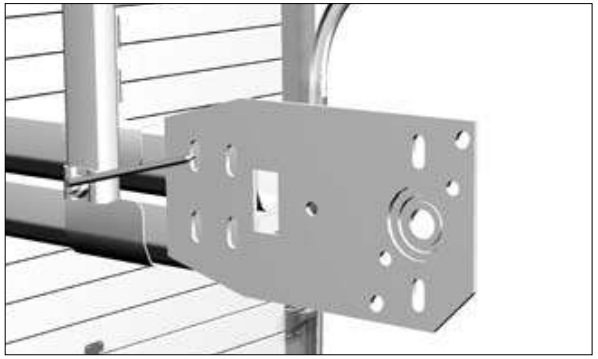

Place the end support bracket against the horizontal tracks on the outside. Mark the holes in the tracks for bracket fastening using perforation in it.

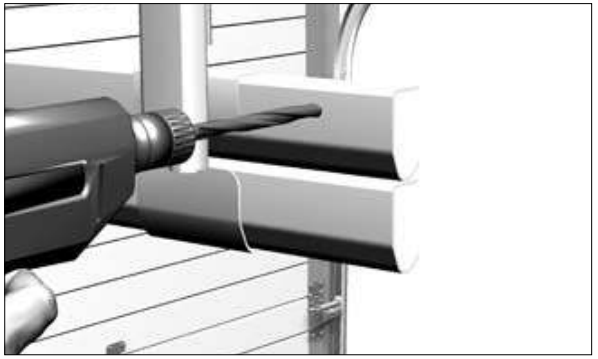

Drill the marked holes ∅8.5 mm.

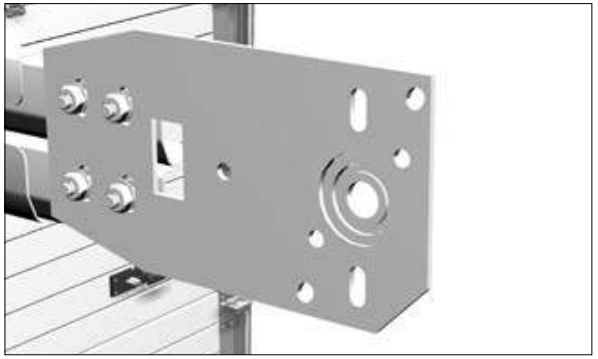

Fasten the end support bracket to the double horizontal tracks using bolts and nuts.

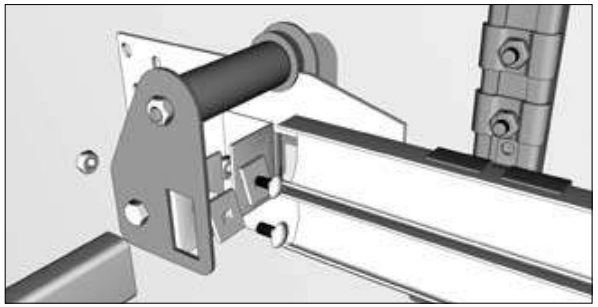

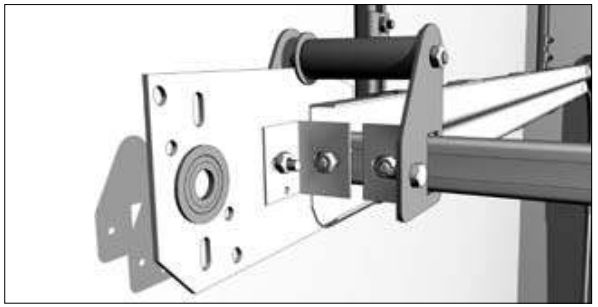

Position and fix the cable guiding roller for drum behind together with the mounting angle for horizontal lath on the end support bracket using a bolt and a nut. Position and fasten the C-profile using mounting angles, lock plates and bolts with semi-rounded head M8x25 and suitable nuts.

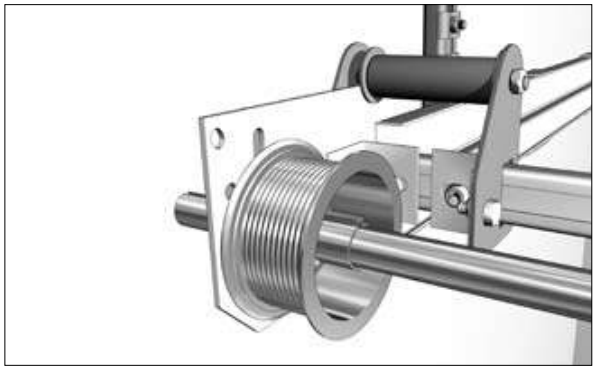

Install the shaft in the end support brackets bearing, having installed the drums, the spring and the fastening bracket for drum behind on it before.

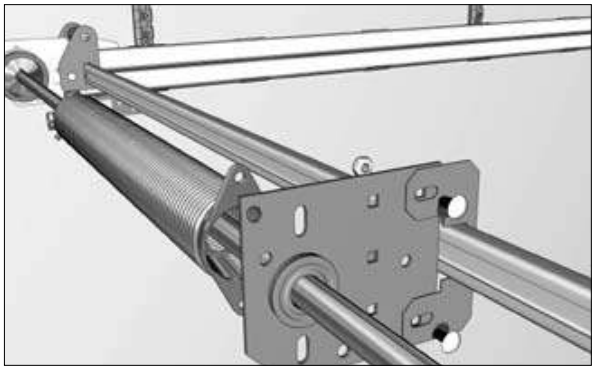

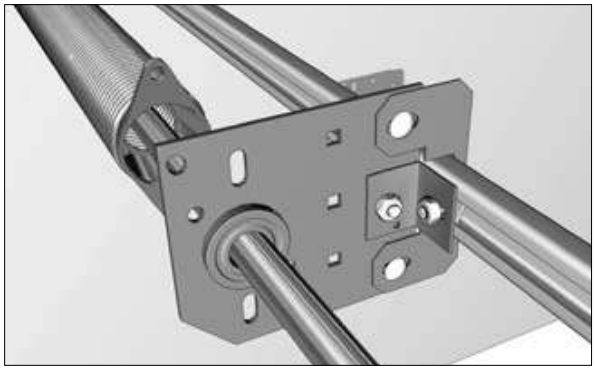

Fasten the fastening bracket for drum behind to the C-profile using the C-profile fastening bracket, the mounting angle for horizontal lath installation, the lock plate and a bolt and a nut.

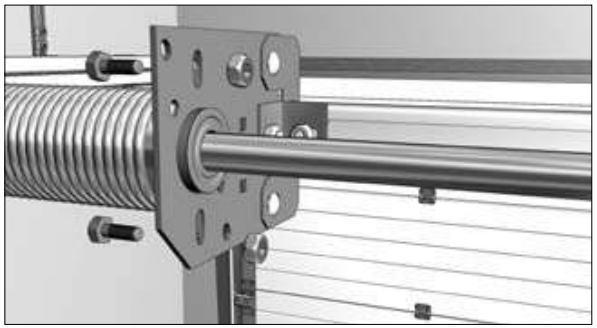

Fix the spring to the fastening bracket for drum behind using 2 bolts and nuts.

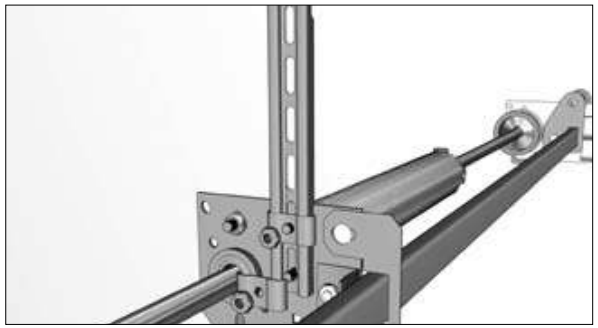

Fasten the assembly to the ceiling using brackets (the bracket type depend on the lintel height).

Dismounting

Unplug the electric drive. Dismount the electric drive according to the directions for electric drive. Close the door and loose the spring. Then dismounting must be performed in accordance with this directions in the reverse order.

Upgrading

Installation of the additional equipment or accessories as well as self-replacement or self-adjustment of the components without consulting with the manufacturer is forbidden.

Only original spare parts and accessories are recommended to be applied for installation and operation of the sectional doors.

The manufacturing company shall not be held responsible for possible injuries and wrong done to people, animals or objects in case of unauthorized modification.

Maintenance

The sectional doors do not need any complicated or special maintenance.

Panels that make up the door shield, have the resistant protective-decorative coating. To keep them nice and tidy we recommend to clean their surface using a moist rag and neutral domestic detergents.

In case of door hinge creaking or roller axes creaking they should be lubricated through the lubrication hole in the central part of the hinge curl or in the central part of the roller holder curl.

If closing or opening of the doors requires force applying, adjust the rollers. If there is a clearance between the roller and the track profile, loose the bolts on the roller holder, move the roller holder along the slots until the roller fits tightly to the track, tighten the loosed bolts on the roller holders.

If there are creaks and knocks in the torsion gears clean them from dust and dirt with a dry rag and streak any lubricant for metal surfaces on the about 3 cm wide area along the spring

For manual opening and closing of the door the handle is used.

If the automatic drive is used follow the directions for the drive.

Do keep the tracks clean. Do not apply lubricants for them!

After about 20000 times of door operation acts an expert should test the spring mechanisms.

Test is carried out by the doors operation intensity:

- up to 5 times a day – every 9 years;
- up to 10 times a day – every 4.5 years;
- up to 20 times a day – every 2.5 years;
- up to 50 times a day – every year.

The doors should be installed, adjusted or repaired only by qualified specialists.